Planning (02)

Alban Grastien
alban.grastien@rsise.anu.edu.au

STRIPS: the states

Conjunction (or set) of literals

- **Propositional literals**
  - $Poor \wedge Unknown$
- **Ground first order literals**
  - $At(Plane_1, Paris) \wedge At(Plane_2, Rennes)$
  - $\cancel{At(x, Paris) \wedge At(y, Rennes)}$
- **No function**
  - $\cancel{At(Father(Alex), Rouen)}$ but
  - $At(Pierre, Rouen) \wedge Father(Pierre, Alex)$
- **Closed-world assumption**
  - any condition that is not mentioned is implicitly assumed false

STRIPS: the states (example)

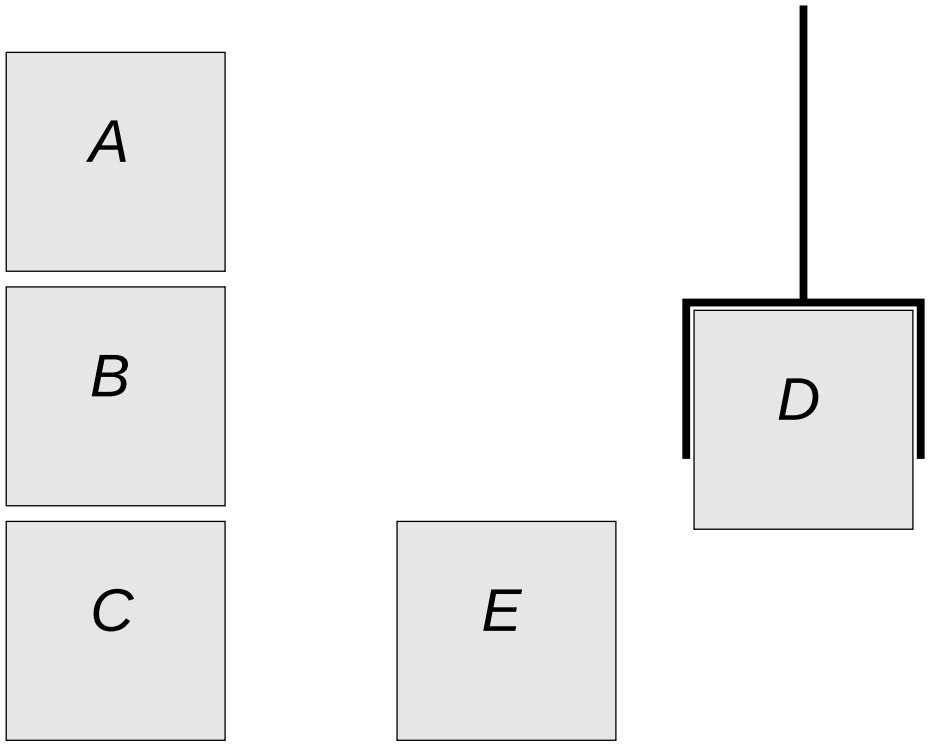

$$OnTable(C) \wedge OnTable(E) \wedge On(B,C) \wedge On(A,B) \wedge$$
$$Holding(D) \wedge OnTop(A) \wedge OnTop(E)$$

STRIPS: the goals

Partially specified goal represented as a conjunction of positive ground literals

Example: we want a stack with exactly C and D (D under C)

- $g = On(C, D) \wedge OnTable(D) \wedge OnTop(C)$
- $\cancel{g = On(C, D) \wedge OnTable(D) \wedge \neg On(x, C)}$

A state s **satisfies** a goal if s contains all the atoms in g

- **Example**: the state $OnTable(A) \wedge OnTable(B) \wedge OnTable(D) \wedge Holding(E) \wedge On(C, D) \wedge OnTop(A) \wedge OnTop(B) \wedge OnTop(C)$ satisfies the goal g

STRIPS: the actions

An action is specified in terms of **preconditions** that must hold before the execution of the action and **effects** that ensue when it is executed.

An **action schema** is described by:

- Its name and a set of parameters
- The precondition: a conjunction of function-free positive literals whose variables must appear in the action's parameter list
- The effect: a conjunction of function-free literals whose variables must appear in the action's parameter list
  - A positive literal P in the effect is asserted to be true in the state resulting from the action
  - A negative literal $\neg P$ in the effect is asserted to be false in the state resulting from the action

STRIPS: the actions (example)

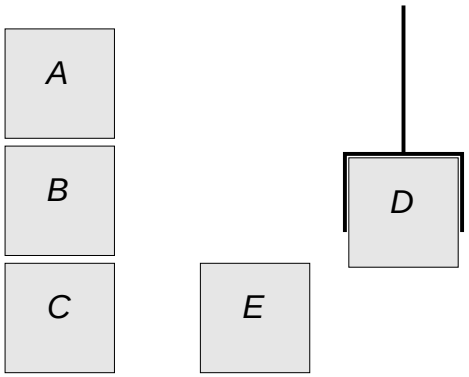

Action ($Take(block_1, block_2)$,
PRECOND: $OnTop(block_1) \wedge On(block_1, block_2) \wedge EmptyClaw$
EFFECT: $Holding(block_1) \wedge OnTop(block_2) \wedge \neg OnTop(block_1) \wedge \neg On(block_1, block_2) \wedge \neg EmptyClaw$)

Action ($TakeOnTable(block_1)$,
PRECOND: $OnTop(block_1) \wedge OnTable(block_1) \wedge EmptyClaw$
EFFECT: $Holding(block_1) \wedge \neg OnTop(block_1) \wedge \neg OnTable(block_1) \wedge \neg EmptyClaw$)

STRIPS: Executing an action

- Let $a = (\textsc{Pre}, \textsc{Eff}^+ \cup \textsc{Eff}^-)$ be an instance of a schema action
- Let $s \subseteq L$ be a set of literals (*i.e* a state)

$$\gamma(s, a) = \begin{cases} s \setminus \textsc{Eff}^- \cup \textsc{Eff}^+ & \text{if } \textsc{Pre} \subseteq s \\ \textit{undefined otherwise (action not executable)} & \end{cases}$$

Executing an action: example

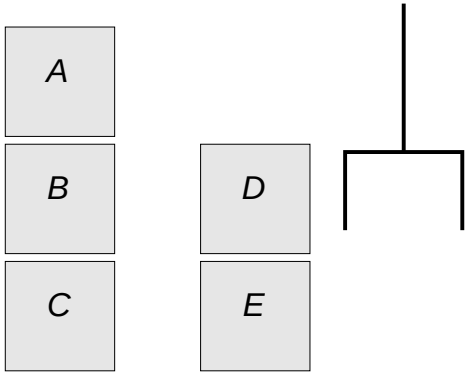

$OnTable(C) \wedge OnTable(E) \wedge On(B,C) \wedge On(A,B) \wedge EmptyClaw \wedge OnTop(A) \wedge OnTop(D) \wedge On(D,E)$

Action: Take

Action ($Take(block_1, block_2)$,
PRECOND: $OnTop(block_1) \wedge On(block_1, block_2) \wedge EmptyClaw$
EFFECT: $Holding(block_1) \wedge OnTop(block_2) \wedge \neg OnTop(block_1) \wedge \neg On(block_1, block_2) \wedge \neg EmptyClaw$)

ADL representation

STRIPS	ADL
Only positive literals in states closed world assumption unmentioned literals are false $\{Poor, Unknown\}$	Positive and negative literals in states open world assumption unmentioned literals are unknown $\{\neg Rich, \neg Famous\}$
Effect $\{P, \neg Q\}$ means add P delete Q	Effect $\{P, \neg Q\}$ means add P and $\neg Q$, delete Q and $\neg P$
Only positive literals in prec. & goals $\{Rich, Famous\}$	Prec. & goals are arbitrary formulae $\exists l\ At(T1, l) \vee At(T2, l)$
Effects are sets (conjunctions)	Conditional & univ. quantified effects **when** $C : E$ **when** P **forall** $x\ Q(x)$ E takes place only when C is true
No support for equality and types	Equality predicate (x=y) built in Variables may have types: $pickup(r : robot, x : block)$

PDDL (Planning Domain Definition Language) supports STRIPS and ADL